PRECISION CONTROL VALVE MANUFACTURER

Selector Valves
Venting Valves
Stack Valves

Electric Operators
Pneumatic Operators
Special Applications

Conant Controls, Inc.

Toll Free 1-800-401-4647 or http://www.conantcontrols.com

P.O. Box 310
427 Riverside Avenue
Medford, MA 02155

Phone: (781) 395-2240
Fax: (781) 395-7247
Email: Sales@conantcontrols.com

PRECISION SELECTOR VALVES

Conant was established in 1856 and through the years it has built its reputation on manufacturing and design excellence and product reliability. Conant Controls has designed its complete line of Precision Selector Valves, Stack Valves, and Control Vent Valves to offer the systems' designer a truly dependable valve of the highest quality which has been manufactured to rigid specifications in order to provide long life and trouble-free operation. The choice of valve materials, porting arrangements, and sizes enables the selection of the most appropriate valve for the most efficient system design. Each valve is air-tested under water before shipment to guarantee product reliability. Conant Controls Valves can be used in a wide variety of applications, including Instrumentation, Research and Development, Pilot and Process Sampling, Gas Chromatography, Complex Fluid Transfer Circuitry, Remote Control and Positioning, and Switching and Transfer Systems. Many years in the field have proven that Conant Controls Precision Selector Valves have been able to withstand demanding applications under a wide range of pressure, temperature, and corrosive conditions.

Conant also welcomes the opportunity to work with design engineers in developing valves that are not covered in this standard catalog line.

The following are just some of the features that have made Conant Controls Valves among the most reliable in the industry:

Self Lubricating

Not just a coating, but solid Teflon®, used in the sleeve or rotor of the valve has natural, self lubricating properties and a low coefficient of friction. Therefore, there is no need for oil or grease. Teflon® has lower friction than any other solid material including graphite and molybdenum disulfide, and its lubricity results in smoother movement and operation of the valve.

Chemical Resistance

Valves are completely resistant to nearly all chemicals, gases, and solvents, such as strong caustics, sulfuric and hydrofluoric acids, aqua regia, and solvents, such as aliphatic and aromatic hydrocarbons, alcohols, esters, ketones, and ethers up to their boiling points.

Temperature and Pressure Ranges: −60°F to +400°F

Teflon® offers this wide temperature range, and with the use of Teflon® we are able to produce a valve that has exceptional thermal stability while maintaining a low coefficient of friction. Therefore, the valve is suitable for continuous service at either high or low temperatures. The pressure range for maximum continuous service is from 0-1000 PSI (stainless steel).

Wear Resistance

In operation, thin films of Teflon® are transferred from the rotor to the mating surface (or vice versa) in the body of the valve until it is coated with Teflon®. Thus, the condition becomes one of Teflon® sliding against Teflon®. After the initial break-in period, this produces a surface with extremely low wear and eliminates fretting and galling.

Warranty

Conant Controls, Inc. warrants its products against defects in manufacturing or design for a period of one year, from date of delivery if such products are used for the purpose for which they are manufactured and sold. This warranty is limited to the furnishing of replacements for defective products, and Conant Controls, Inc. shall not be liable for any labor, consequential damages, down-time or any loss, damage or expense of any kind arising out of defective products.

To the best of our knowledge the information contained herein is accurate. However, Conant Controls, Inc. assumes no liability whatsoever for the accuracy or completeness of the information contained herein. Final determination of the suitability of any information or material for the use contemplated, or the manner of use, is the sole responsibility of the user.

The foregoing warranty is exclusive and in lieu of any and all other warranties, express or implied. No warranty of merchantability, no implied warranty of fitness for any particular purpose, and no implied warranty arising by usage of trade, course of performance is given by seller or shall arise by or in connection with this sale and/or the seller's and/or buyer's conduct in relation thereto or to each other, and in no event shall seller be liable on any such warranty with respect to any product.

BAR STOCK BODIES

2 • 3 • 4 • 5 Way

1/8" – 1/4" – 3/8" – 1/2" I.P.S Teflon® Sleeve

6 • 7 • 8 • 9 • 10 • 11 • 12 Way and 1/16" I.P.S. units available

Bar Stock bodies are for more severe service applications. They are also available in the widest ranges of sizes and materials of all Conant Controls Valves. They can also be adapted to motorized operation.

MATERIALS

Brass, Aluminum, and 316 Stainless Steel. Monel®, Inconel®, Hastelloy®, Titanium, Carpenter 20Cb, and Nickel are available.

PRESSURE RANGE

Brass, Aluminum	0-250 PSI
Stainless Steel	0-1000 PSI

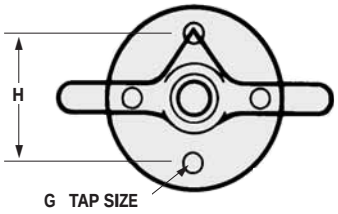

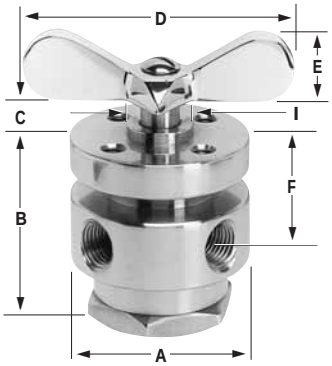

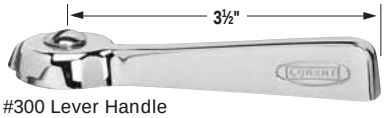

#300 Lever Handle
(Standard on ⅜" and ½" sizes)

#250 Lever Handle
(Optional on ⅛" and ¼" sizes)

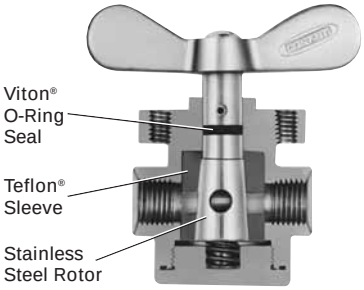

Front View Panel Mount	Part No.	Pipe Thread	A	B	C	D	E	F	G	H	I
			Dimensions (Inches)								
2 WAY DRILLINGS 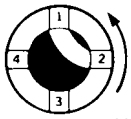 HANDLE TURN 90°	**CBR2TSL007**	1/8	2	2	7/16	3	3/4	1	1/4–20TH'D	1 3/8	3/4 O.D. x 1/8
	CBR2TSLXXX	1/4	2	2	7/16	3	3/4	1	1/4–20TH'D	1 3/8	3/4 O.D. x 1/8
	CAL2TSLXXX	3/8	2 1/2	2 7/8	9/16	3 1/2	3/4	1 1/2	1/4–20TH'D	2	1 O.D. x 1/4
	C2316XXX	1/2	2 1/2	2 7/8	9/16	3 1/2	3/4	1 1/2	1/4–20TH'D	2	1 O.D. x 1/4
3 WAY DRILLINGS 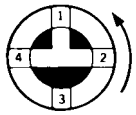 HANDLE TURN 90°	**CBR3TSLXXX**	1/8	2	2	7/16	3	3/4	1	1/4–20TH'D	1 3/8	3/4 O.D. x 1/8
	CAL3TSL010	1/4	2	2	7/16	3	3/4	1	1/4–20TH'D	1 3/8	3/4 O.D. x 1/8
	CAL3TSLXXX	3/8	2 1/2	2 7/8	9/16	3 1/2	3/4	1 1/2	1/4–20TH'D	2	1 O.D. x 1/4
	C3316XXX	1/2	2 1/2	2 7/8	9/16	3 1/2	3/4	1 1/2	1/4–20TH'D	2	1 O.D. x 1/4
4 WAY DRILLINGS 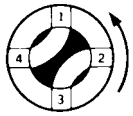 HANDLE TURN 90°	**CBR4TSLXXX**	1/8	2	2	7/16	3	3/4	1	1/4–20TH'D	1 3/8	3/4 O.D. x 1/8
	CAL4TSLXXX	1/4	2	2	7/16	3	3/4	1	1/4–20TH'D	1 3/8	3/4 O.D. x 1/8
	C4316012	3/8	2 1/2	2 7/8	9/16	3 1/2	3/4	1 1/2	1/4–20TH'D	2	1 O.D. x 1/4
	C4316XXX	1/2	2 1/2	2 7/8	9/16	3 1/2	3/4	1 1/2	1/4–20TH'D	2	1 O.D. x 1/4
5 WAY DRILLINGS 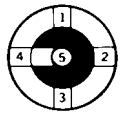 HANDLE TURN 360°	**CBR5TSLXXX**	1/8	2	2 1/2	7/16	3	3/4	1	1/4–20TH'D	1 3/8	3/4 O.D. x 1/8
	CAL5TSLXXX	1/4	2	2 1/2	7/16	3	3/4	1	1/4–20TH'D	1 3/8	3/4 O.D. x 1/8
	C5316XXX	3/8	2 1/2	3 3/4	9/16	3 1/2	3/4	1 1/2	1/4–20TH'D	2	1 O.D. x 1/4
	CBR5TSL015	1/2	2 1/2	3 3/4	9/16	3 1/2	3/4	1 1/2	1/4–20TH'D	2	1 O.D. x 1/4

XXX = Pipe size or 1/8" = 007, 1/4" = 010, 3/8" = 012 and 1/2" = 015.
Series CBR2TSL, CBR3TSL, CBR4TSL, CBR5TSL — Brass body, Teflon® sleeve, precision tapered S.S. rotor.
Series CAL2TSL, CAL3TSL, CAL4TSL, CAL5TSL — Aluminum body Teflon® sleeve, precision tapered S.S. rotor.
Series C2316, C3316, C4316, C5316 — Type 316 S.S. Body, Teflon® sleeve, precision tapered #316 S.S. rotor.
NOTE: 2-Way valves are normally furnished ELL-drilled; optional straight-through or slotted porting available at no extra charge when requested. Valves having 90° rotation are equipped with mechanical stops. Detent positioning at extra cost on valves with greater than 90° rotation (i.e., 5-Way valve). Extra charge for special porting.

CONTROL VENT

Series 180 and Series 360

1/4" – 3/8" – 1/2" I.P.S Teflon® Sleeve

The Conant Control Vent Selector Valve can accomplish in one valve what until now could only be achieved by using a number of selector valves. It can operate any one control valve while simultaneously venting to the atmosphere all the remaining valves connected to it. There are two series of Control Vent Valves: Series 180, which offers 180° rotation for servicing up to three control valves, and Series 360, which offers 360° rotation for servicing up to four control valves.

MATERIALS

Brass, Aluminum,
316 Stainless Steel.

PRESSURE RANGE

Brass, Aluminum	0-250 PSI
Stainless Steel	0-1000 PSI

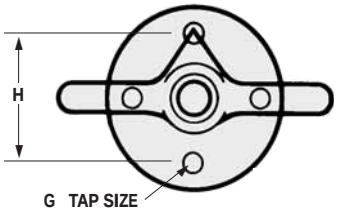

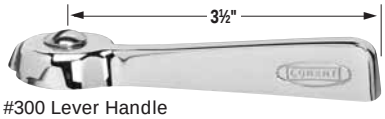

#300 Lever Handle
(Standard on ⅜" and ½" sizes)

#250 Lever Handle
(Optional on ⅛" and ¼" sizes)

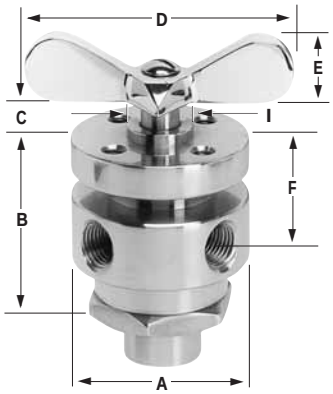

Part No.	Description	Pipe Thread	Dimensions (Inches) A	B	C	D	E	F	G	H	I
C180B010 C180B012 C180B015	Brass body, Teflon® sleeve, stainless steel rotor.	¼	2	2½	7/16	3	¾	1	¼–20TH'D	1⅜	¾ O.D. x ⅛
		⅜	2½	3¾	9/16	3½	¾	1½	¼–20TH'D	2	1 O.D. x ¼
		½	2½	3¾	9/16	3½	¾	1½	¼–20TH'D	2	1 O.D. x ¼
C180A010 C180A012 C180A015	Aluminum body, Teflon® sleeve, stainless steel rotor.	¼	2	2½	7/16	3	¾	1	¼–20TH'D	1⅜	¾ O.D. x ⅛
		⅜	2½	3¾	9/16	3½	¾	1½	¼–20TH'D	2	1 O.D. x ¼
		½	2½	3¾	9/16	3½	¾	1½	¼–20TH'D	2	1 O.D. x ¼
C180S010 C180S012 C180S015	316 S.S. body, Teflon® sleeve, stainless steel rotor.	¼	2	2½	7/16	3	¾	1	¼–20TH'D	1⅜	¾ O.D. x ⅛
		⅜	2½	3¾	9/16	3½	¾	1½	¼–20TH'D	2	1 O.D. x ¼
		½	2½	3¾	9/16	3½	¾	1½	¼–20TH'D	2	1 O.D. x ¼
C360B010 C360B012 C360B015	Brass body, Teflon® sleeve, stainless steel rotor.	¼	2	2½	7/16	3	¾	1	¼–20TH'D	1⅜	¾ O.D. x ⅛
		⅜	2½	3¾	9/16	3½	¾	1½	¼–20TH'D	2	1 O.D. x ¼
		½	2½	3¾	9/16	3½	¾	1½	¼–20TH'D	2	1 O.D. x ¼
C360A010 C360A012 C360A015	Aluminum body, Teflon® sleeve, stainless steel rotor.	¼	2	2½	7/16	3	¾	1	¼–20TH'D	1⅜	¾ O.D. x ⅛
		⅜	2½	3¾	9/16	3½	¾	1½	¼–20TH'D	2	1 O.D. x ¼
		½	2½	3¾	9/16	3½	¾	1½	¼–20TH'D	2	1 O.D. x ¼
C360S010 C360S012 C360S015	316 S.S. body, Teflon® sleeve, stainless steel rotor.	¼	2	2½	7/16	3	¾	1	¼–20TH'D	1⅜	¾ O.D. x ⅛
		⅜	2½	3¾	9/16	3½	¾	1½	¼–20TH'D	2	1 O.D. x ¼
		½	2½	3¾	9/16	3½	¾	1½	¼–20TH'D	2	1 O.D. x ¼

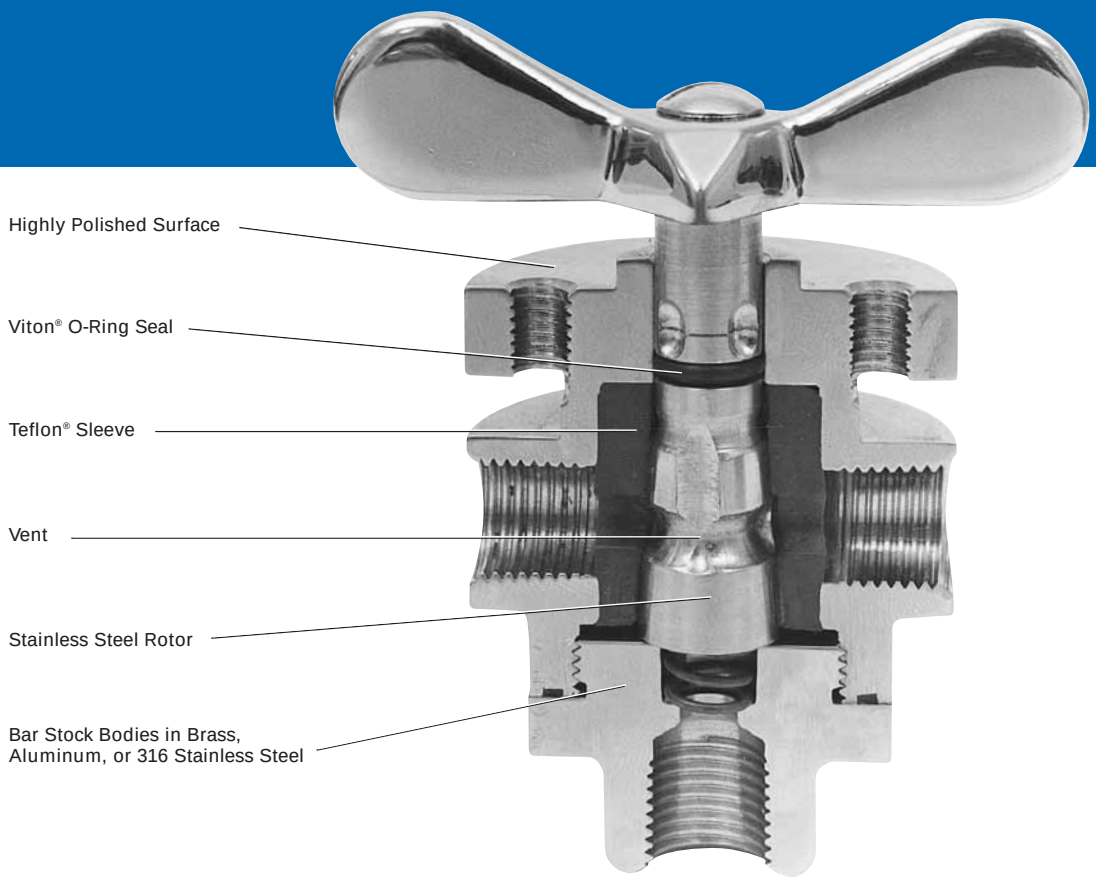

Series 180

For operating from one to three control valves. An "OFF" position can be provided by blocking one of the ports. Mechanical stops at 0° and 180° and a mid-position detent.

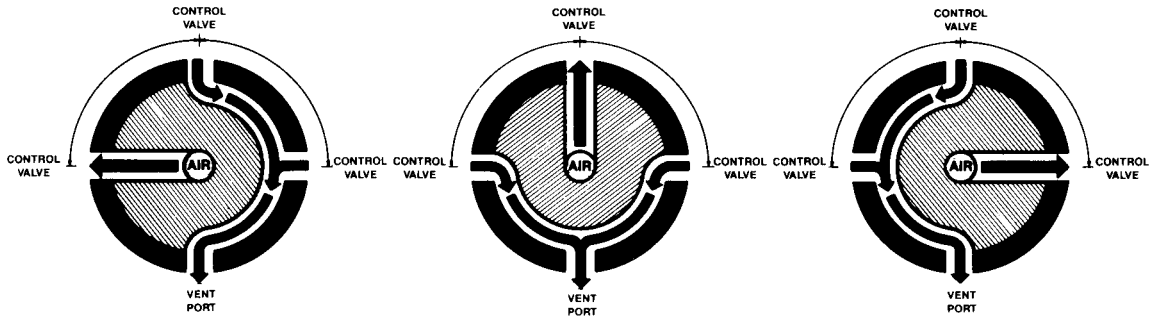

Series 360

For operating from one to four control valves. 360° rotation, detent positioning every 90°. Can operate one valve while venting other three through special ports in the body of the valve.

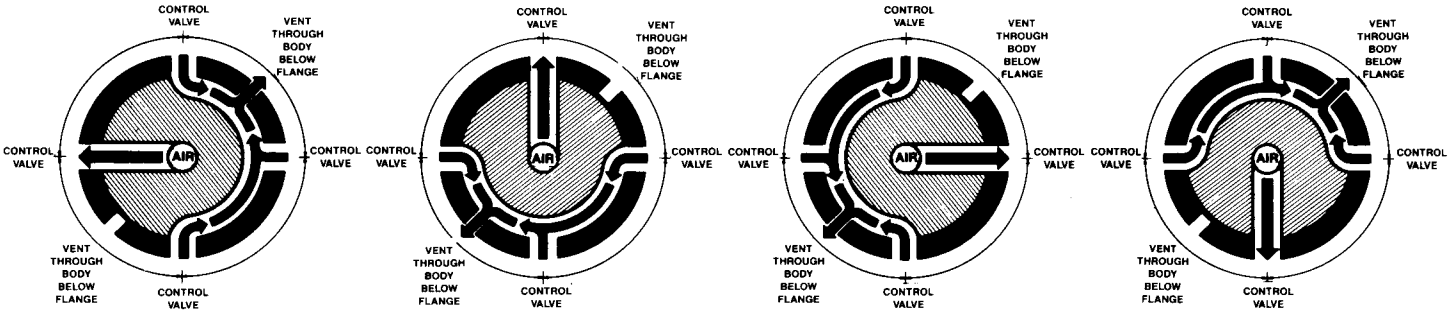

STACK SELECTOR VALVES

2 • 3 • 4 • 5 Way
2, 3, 4, 5 Stack

Conant Stack Valves offer various combinations of porting arrangements to suit your requirements for more simplified piping configurations. These units are compact, require low torque, and eliminate the need for gear sets and other mechanical arrangements while possessing the capability of handling up to five separate switching arrangements.

MATERIALS

Brass, Aluminum, 316 Stainless Steel

PRESSURE RANGE

Brass, Aluminum and 316 Stainless Steel	0-150 PSI

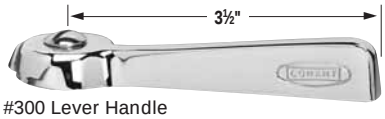

#300 Lever Handle
(Standard on ⅜" and ½" sizes)

CONANT QUALITY AND RELIABILITY

Teflon® has lower friction than any other solid material and its lubricity results in smoother movement and operation of the valve. Teflon® also offers a wide temperature range with exceptional thermal stability. Valves are completely resistant to nearly all chemicals, gases, and solvents.

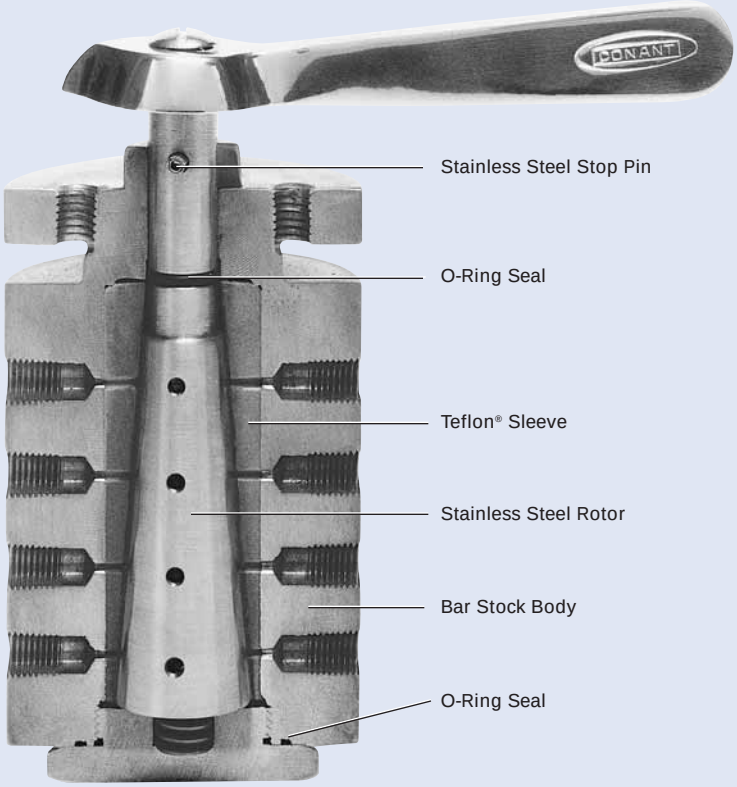

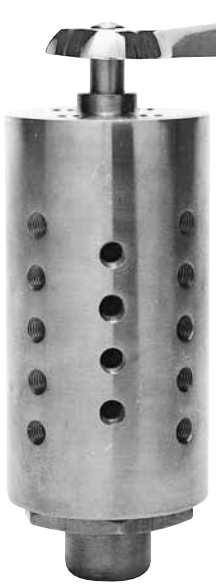

5 Way • 5 Stack
⅛" I.P.S.

2 Way • 2 Stack
½" I.P.S.

4 Way • 4 Stack
¼" I.P.S.

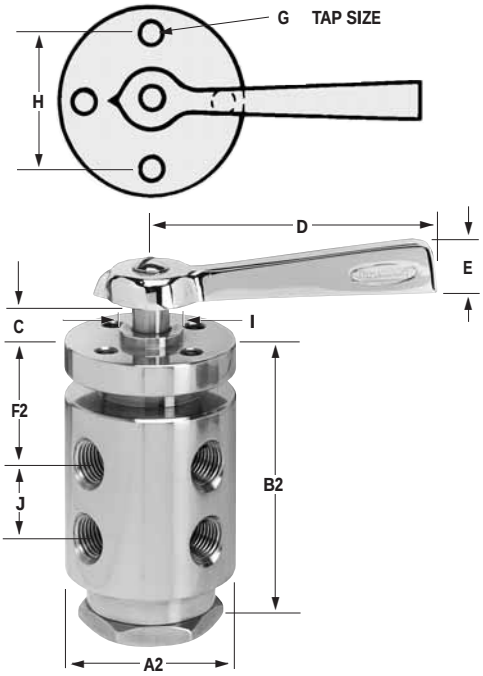

Front View Panel Mount	Part No. (2-STACKS)	Pipe Thread	A2*	A3	A4,5	B2*	B3	B4	B5	C	D	E	F2*	F3*	F4,5*	G	H	I	J
		Dimensions (Inches)																	
2 WAY DRILLINGS 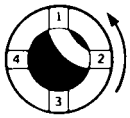 HANDLE TURN 90°	**CBR2TSLB2007**	⅛	2	2¼	2½	3⅜	3⅞	5	5⅞	9/16	3½	¾	1¼	1½	1½	¼–20TH'D	1⅜	¾ O.D. x ⅛	⅞
	CBR2TSLB2XXX	¼	2	2¼	2½	3⅜	3⅞	5	5⅞	9/16	3½	¾	1¼	1½	1½	¼–20TH'D	1⅜	¾ O.D. x ⅛	⅞
	CAL2TSLA2XXX	⅜	2	2½	N/A	3⅜	5¼	N/A	N/A	9/16	3½	¾	1¼	1½	N/A	¼–20TH'D	2	1 O.D. x ¼	1¼
	C2316S2XXX	½	2	2½	N/A	3⅜	5¼	N/A	N/A	9/16	3½	¾	1¼	1½	N/A	¼–20TH'D	2	1 O.D. x ¼	1¼
3 WAY DRILLINGS 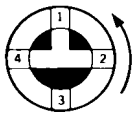 HANDLE TURN 90°	**CBR3TSLB2XXX**	⅛	2	2¼	2½	3⅜	3⅞	5	5⅞	9/16	3½	¾	1¼	1½	1½	¼–20TH'D	1⅜	¾ O.D. x ⅛	⅞
	CBR3TSLB2010	¼	2	2¼	2½	3⅜	3⅞	5	5⅞	9/16	3½	¾	1¼	1½	1½	¼–20TH'D	1⅜	¾ O.D. x ⅛	⅞
	CAL3TSLA2XXX	⅜	2	2½	N/A	3⅜	5¼	N/A	N/A	9/16	3½	¾	1¼	1½	N/A	¼–20TH'D	2	1 O.D. x ¼	1¼
	C3316S2XXX	½	2	2½	N/A	3⅜	5¼	N/A	N/A	9/16	3½	¾	1¼	1½	N/A	¼–20TH'D	2	1 O.D. x ¼	1¼
4 WAY DRILLINGS 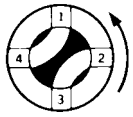 HANDLE TURN 90°	**CBR4TSLB2XXX**	⅛	2	2¼	2½	3⅜	3⅞	5	5⅞	9/16	3½	¾	1¼	1½	1½	¼–20TH'D	1⅜	¾ O.D. x ⅛	⅞
	CBR4TSLB2XXX	¼	2	2¼	2½	3⅜	3⅞	5	5⅞	9/16	3½	¾	1¼	1½	1½	¼–20TH'D	1⅜	¾ O.D. x ⅛	⅞
	CAL4TSLA2012	⅜	2	2½	N/A	3⅜	5¼	N/A	N/A	9/16	3½	¾	1¼	1½	N/A	¼–20TH'D	2	1 O.D. x ¼	1¼
	C4316S2XXX	½	2	2½	N/A	3⅜	5¼	N/A	N/A	9/16	3½	¾	1¼	1½	N/A	¼–20TH'D	2	1 O.D. x ¼	1¼
5 WAY DRILLINGS 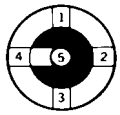 HANDLE TURN 360°	**CBR5TSLB2XXX**	⅛	2	2¼	2½	3⅜	3⅞	5	5⅞	9/16	3½	¾	1¼	1½	1½	¼–20TH'D	1⅜	¾ O.D. x ⅛	⅞
	CBR5TSLB2XXX	¼	2	2¼	2½	3⅜	3⅞	5	5⅞	9/16	3½	¾	1¼	1½	1½	¼–20TH'D	1⅜	¾ O.D. x ⅛	⅞
	CAL5TSLA2XXX	⅜	2	2½	N/A	3⅜	5¼	N/A	N/A	9/16	3½	¾	1¼	1½	N/A	¼–20TH'D	2	1 O.D. x ¼	1¼
	C5316S2015	½	2	2½	N/A	3⅜	5¼	N/A	N/A	9/16	3½	¾	1¼	1½	N/A	¼–20TH'D	2	1 O.D. x ¼	1¼

XXX = Pipe size or ⅛" = 007, ¼" = 010, ⅜" = 012 and ½" = 015.
* A2, A3, B2, etc. indicates dimensions for 2-stack, 3-stack, etc.

Series CBR2TSL, CBR3TSL, CBR4TSL, CBR5TSL — Brass body, Teflon® sleeve, stainless steel rotor.
Series CAL2TSL, CAL3TSL, CAL4TSL, CAL5TSL — Aluminum body, Teflon® sleeve, stainless steel rotor.
Series C2316, C3316, C4316, C5316 — Type 316 stainless steel body, Teflon® sleeve, stainless steel rotor.

NOTE: 2-way valves are normally furnished ELL-drilled; optional straight-through or slotted porting available at no extra charge when requested. Valves having 90° rotation are equipped with mechanical stops. Detent positioning at extra cost on valves with greater than 90° rotation (i.e., 5-Way Valve). Extra charge for special porting.

* Part numbers are for uniform portings at all levels. Special porting combinations for different levels available at extra charge when specified clearly by level.

BAR STOCK BODIES

With Teflon® Rotor

Locknut Panel Mount

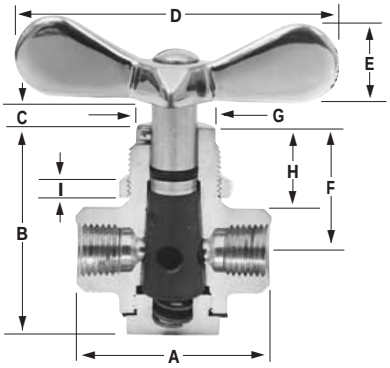

Standard Mount

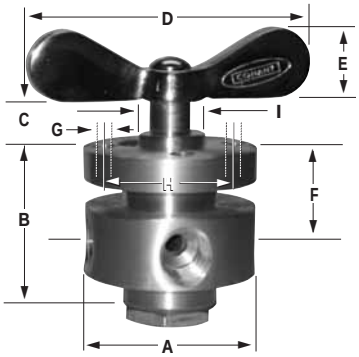

#250 Lever Handle (Optional on ⅛" and ¼" sizes)

Conant Controls' Precision Selector Valves are primarily designed for standard duty. The Teflon® rotor eliminates the need for lubrication and contributes to long valve life. These valves are particularly well-suited for instrument air and other similar applications.

MATERIALS Brass & Aluminum

PRESSURE RANGE 0-250 PSI

Front View Panel Mount	Part No.	Description	Pipe Thread	A	B	C	D	E	F	G	H	I
				Dimensions (Inches)								
2 WAY DRILLINGS 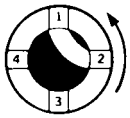 HANDLE TURN 90°	CBR2T007	Brass Bar Stock Std.	⅛	1⅞	1⅞	7/16	3	¾	1	¼–20TH'D	1⅜	¾ O.D. x ⅛
	CBR2T010	Brass Bar Stock Std.	¼	1⅞	1⅞	7/16	3	¾	1	¼–20TH'D	1⅜	¾ O.D. x ⅛
	CBR2LT007	Bar Stock Brass Locknut	⅛	1⅞	1⅞	7/16	3	9/16	1	⅞ O.D.	9/16	1 HEX x 3/16
	CBR2LT010	Bar Stock Brass Locknut	¼	1⅞	1⅞	7/16	3	9/16	1	⅞ O.D.	9/16	1 HEX x 3/16
	CAL2T007	Bar Stock Aluminum	⅛	1⅞	1⅞	7/16	3	¾	1	¼–20TH'D	1⅜	¾ O.D. x ⅛
	CAL2T010	Bar Stock Aluminum	¼	1⅞	1⅞	7/16	3	¾	1	¼–20TH'D	1⅜	¾ O.D. x ⅛
3 WAY DRILLINGS 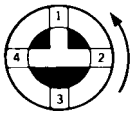 HANDLE TURN 90°	CBR3T007	Brass Bar Stock Std.	⅛	1⅞	1⅞	7/16	3	¾	1	¼–20TH'D	1⅜	¾ O.D. x ⅛
	CBR3T010	Brass Bar Stock Std.	¼	1⅞	1⅞	7/16	3	¾	1	¼–20TH'D	1⅜	¾ O.D. x ⅛
	CBR3LT007	Bar Stock Brass Locknut	⅛	1⅞	1⅞	7/16	3	9/16	1	⅞ O.D.	9/16	1 HEX x 3/16
	CBR3LT010	Bar Stock Brass Locknut	¼	1⅞	1⅞	7/16	3	9/16	1	⅞ O.D.	9/16	1 HEX x 3/16
	CAL3T007	Bar Stock Aluminum	⅛	1⅞	1⅞	7/16	3	¾	1	¼–20TH'D	1⅜	¾ O.D. x ⅛
	CAL3T010	Bar Stock Aluminum	¼	1⅞	1⅞	7/16	3	¾	1	¼–20TH'D	1⅜	¾ O.D. x ⅛
4 WAY DRILLINGS 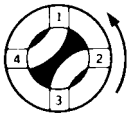 HANDLE TURN 90°	CBR4T007	Brass Bar Stock Std.	⅛	1⅞	1⅞	7/16	3	¾	1	¼–20TH'D	1⅜	¾ O.D. x ⅛
	CBR4T010	Brass Bar Stock Std.	¼	1⅞	1⅞	7/16	3	¾	1	¼–20TH'D	1⅜	¾ O.D. x ⅛
	CBR4LT007	Bar Stock Brass Locknut	⅛	1⅞	1⅞	7/16	3	9/16	1	⅞ O.D.	9/16	1 HEX x 3/16
	CBR4LT010	Bar Stock Brass Locknut	¼	1⅞	1⅞	7/16	3	9/16	1	⅞ O.D.	9/16	1 HEX x 3/16
	CAL4T007	Bar Stock Aluminum	⅛	1⅞	1⅞	7/16	3	¾	1	¼–20TH'D	1⅜	¾ O.D. x ⅛
	CAL4T010	Bar Stock Aluminum	¼	1⅞	1⅞	7/16	3	¾	1	¼–20TH'D	1⅜	¾ O.D. x ⅛
5 WAY DRILLINGS HANDLE TURN 360°	CBR5T007	Brass Bar Stock Std.	⅛	1⅞	2 7/16	7/16	3	¾	1	¼–20TH'D	1⅜	¾ O.D. x ⅛
	CBR5T010	Brass Bar Stock Std.	¼	1⅞	2 7/16	7/16	3	¾	1	¼–20TH'D	1⅜	¾ O.D. x ⅛
	CBR5LT007	Bar Stock Brass Locknut	⅛	1⅞	2 7/16	7/16	3	9/16	1	⅞ O.D.	9/16	1 HEX x 3/16
	CBR5LT010	Bar Stock Brass Locknut	¼	1⅞	2 7/16	7/16	3	9/16	1	⅞ O.D.	9/16	1 HEX x 3/16
	CAL5T007	Bar Stock Aluminum	⅛	1⅞	2 7/16	7/16	3	¾	1	¼–20TH'D	1⅜	¾ O.D. x ⅛
	CAL5T010	Bar Stock Aluminum	¼	1⅞	2 7/16	7/16	3	¾	1	¼–20TH'D	1⅜	¾ O.D. x ⅛

Series CAL2T, CBR2T, CAL3T, CBR3T – Bar Stock aluminum and brass bodies, Teflon® rotor, precision fit.
Series CBR2LT, CBR3LT, CBR4LT, CBR5LT – Bar Stock brass body (locknut), Teflon® rotor, precision fit.
NOTE: 2-way valves are normally furnished ELL-drilled; optional straight-through or slotted porting available at no extra charge when requested.

NAME PLATES

2 Position
90° Turn

3 Position
180° Turn

4 Position
360° Turn

The standard aluminum name plates —3" dia.— are available in the titles listed below. They are black with reverse printing, and are pre-drilled for mounting on ⅛" or ¼" valves with a 1⅜" bolt circle. Order by title. Special titles available.

STANDARD TITLES

2-Position 90°

ON-OFF
AUTOMATIC-MANUAL
LOAD-UNLOAD
LOAD-LIFT
LOAD-OFF
OPEN-CLOSED
UP-DOWN

3-Position 180°

OFF-AUTOMATIC-MANUAL
LOAD-OFF-LIFT
LIFT-OFF-LOAD
UP-STOP-DOWN

4-Position

PLAIN PLATES—1, 2, 3, 4
90° APART

Note: Prices for special plates supplied upon request.

STANDARD & OPTIONAL HANDLES

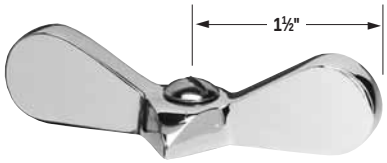

#150 Standard Handle

Standard on ⅛" and ¼" sizes.

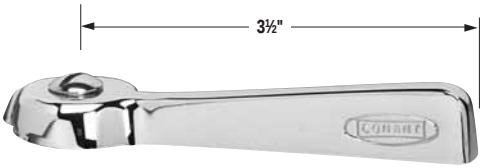

#300 Lever Handle

Standard on ⅜" and ½" sizes and all Stack Valves.

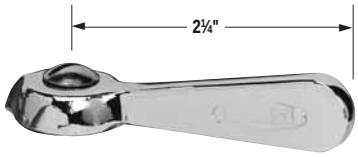

#250 Lever Handle

Optional on ⅛" and ¼" sizes.

IDENTIFICATION TAGS

Stainless steel identification tags are provided at your request at additional cost. These tags are helpful in identifying specific chemicals, gases, solvents, etc. for which the valve is being used.

LOCKING BRACKET

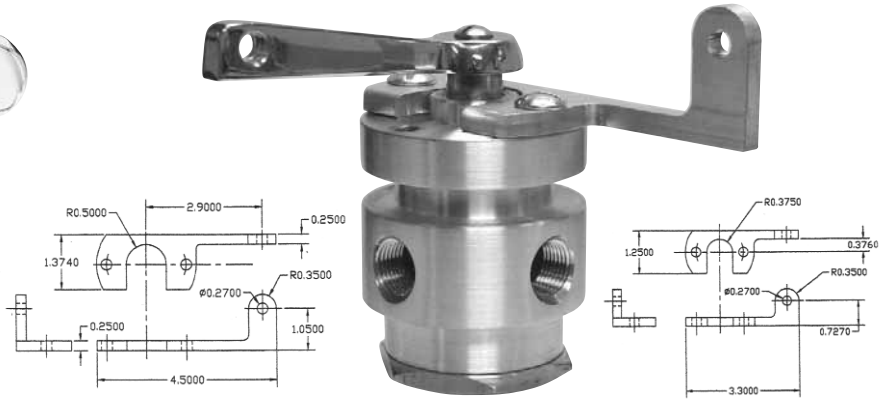

Locking Bracket for use with #300 Lever Handle

Locking Bracket for use with #250 Lever Handle

PNEUMATIC OPERATORS

Single Acting Model SA-50

A spring return fail-safe valve operator. The design incorporates a spring which provides virtually linear torque characteristics throughout its travel. Unit is available in 90° rotation. Provision for manual override is standard on all units. The double piston, double rack and pinion design operates on 80 to 120 PSI.*

Dimensions: 3⅜" X 5⅞" X 3⅜"

Connections: ¼" N.P.T.

Double Acting Model DA-75

A compact air-to-air valve actuator made of corrosion resistant materials. The double piston, double rack and pinion design proves to be durable and consistent in its range of torque output. This model operates on 60-120 PSI air supply. *

Dimensions: 3⅜" X 5⅞" X 3⅜"

Connections: ¼" N.P.T.

	*Supply Pressure (PSI)	Torque (Inch-pounds)		Spring Return Torque	
		Start	End	Start	End
Air-To-Spring (Model SA)	80	99	55	144	90
	120	208	165	144	90
Air-To-Air (Model DA)	60	147			
	80	199			
	120	309			

MODEL SA/DA FEATURES

- Double piston, double rack and pinion design.
  - Constant torque output.
  - Compact actuators.
  - Glass-filled polyester body and end caps.
- Pistons, cylinder guides and racks of one-piece molded Polyamide (Nylon 66) resin.
  - Corrosion resistant.
- Actuator shaft of cast stainless steel (Series 303).
  - Corrosion resistant inside and outside.
  - Massive teeth engagement between racks and pinion.
  - Minimal backlash and no play in parts.
- Double O-rings seal actuator shaft at top and bottom of actuator.
- Concentric spring sets on the spring return unit, single acting or failsafe.
- Extended shaft on actuator top.
  - Position indication.
  - Manual override feasibility.
- Recessed square female drive and square (ISO) bolt circle on bottom of actuator.
- Top shaft, solenoid block and accessory bolt circle conform to NAMUR standard.
  - Allows easy mounting of accessories.

Specifications

- Body Material: Glass-filled polyester
- Shaft: 303 SS w/double O-ring seal
- Temp. Range: -25° F to 195° F
- O-rings: BUNA-N
- Output Torques: 90-309 in-lbs.
- Supply Air: 60 PSI min, 120 PSI max*
- Air Connections: ¼" NPT
- Mounting Dimensions: ISO and NAMUR

*Consult Sales Office for recommended air supply input pressure.

ELECTRIC OPERATORS

Lightweight and compact, these operators are specifically designed for automating and remote control operation of Conant 2 • 3 • 4 • 5 Way Precision Selector Valves — ⅛" through ½" I.P.S. Conant Operators are fast acting — cycles through 90° in 2 seconds depending on torque load. They are normally furnished reversible for valves having a 90° rotation. They may be ordered unidirectional — 360° cycles in 90° steps. Weather-proof or explosion-proof as required.

All operators sold in combination with Conant Precision Selector Valves. Assembled and tested as a unit.

Specifications

Operator Model No.	Torque Output (in/lb)	Cycle Time/90° (seconds)	Weight (lbs)
RF80	80	2.0	2.8

WP: Weatherproof construction available
EP: Explosion-proof construction available

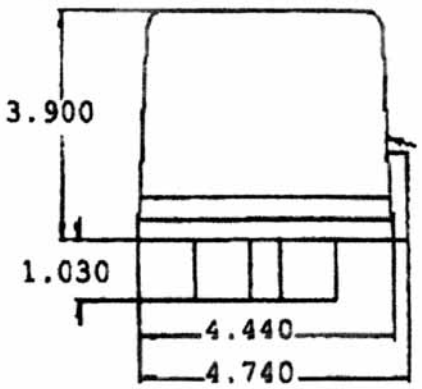

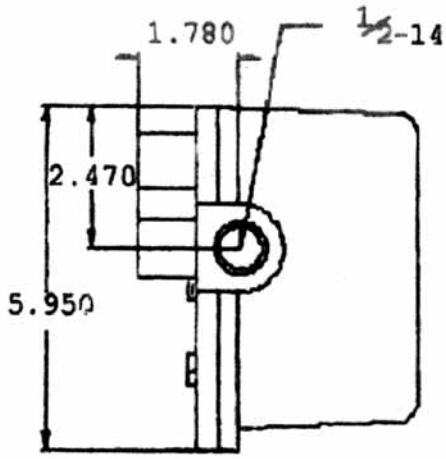

Wiring Diagram

AC Reversible 300/600 Inch Lb.

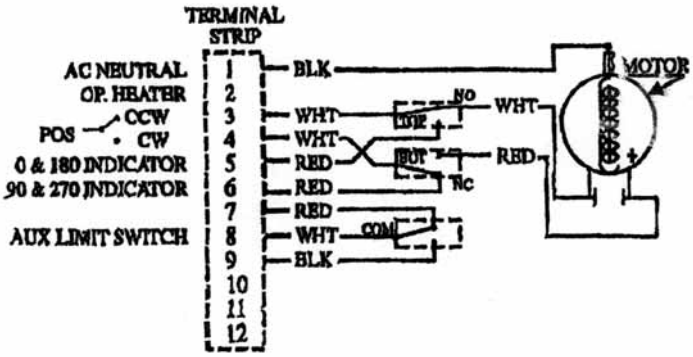

CHEMSELECT®

Chemselect® Thermoplastic Valves are engineered to Conant Controls' exacting standards providing trouble free service in demanding applications.

The Chemselect® valve can be ordered in various thermoplastics, with a choice of Port configurations and sizes.

A Teflon® rotor is standard on all Chemselect® valves giving the valve self-lubricating properties eliminating the need for oils or grease!

The Conant Chemselect® can be ordered in the following materials:

PVC (Polyvinyl Chloride)

PVC is often specified for its versatile characteristics. It has been used for over 30 years in chemical processing, plating, chilled water distribution, deionized water, chemical drainage and many other applications. It has properties that lends itself to resisting chemical attack by acids, alkalies, salt solutions and a host of other chemicals. It is attacked by certain solvents, most chlorinated hydrocarbons and aromatics. Maximum temperature is 140°F. 125 PSI rated at 75°F water non-shock.

CVPC (Chlorinated Polyvinyl Chloride)

CVPC has similar chemical resistance properties to that of PVC. It has a maximum temperature of 180°F. 125 PSI rated at 75°F water non-shock.

PP (Polypropylene)

PP is a member of the Polyolefin family. PP is not physically as strong as PVC or CVPC, however, it is chemically resistant to organic solvents as well as alkalies and acids. It does not hold up against strong oxidizing acids, chlorinated hydrocarbons, and aromatics. Ultraviolet radiation will degrade polyolefins over time. Maximum temperature is 180°F. 125 PSI rated at 75°F water non-shock.

PVDF (Polyvinylidene Fluoride)

PVDF is tough, durable plastic with many unique properties. It has a very good resistance to most acids, bases, and organic solvents. Ultraviolet radiation does not significantly degrade material, however, the fluid in the system can be affect by U.V. Maximum temperature is 240°F. 125 PSI rated at 75°F water non-shock.

Teflon®

Teflon® has superior resistance to most chemicals and solvents. It has self lubricating properties and is a great choice in many applications. Maximum temperature is 400°F. 125 PSI rated at 75°F water non-shock.

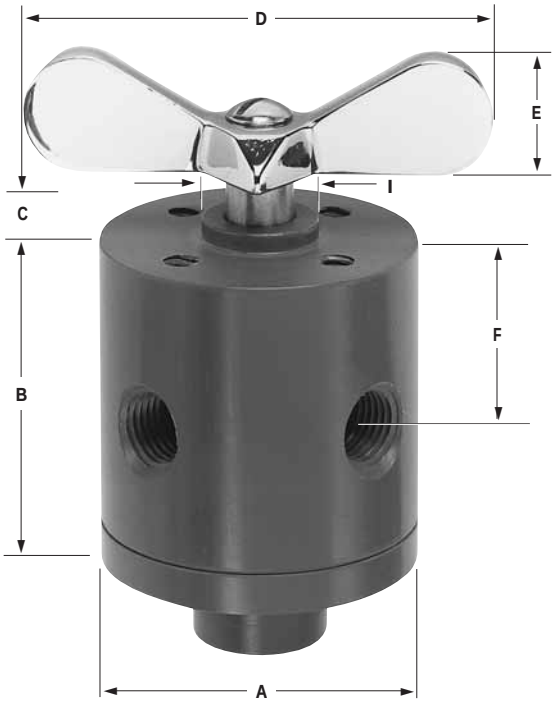

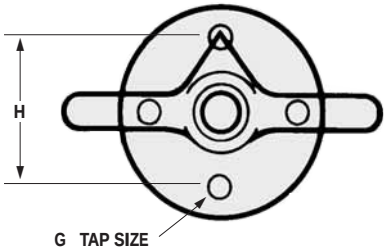

Front View Panel Mount	Part No. (Ref PVC)	Pipe Thread	A	B	C	D	E	F	G	H	I
			Dimensions (Inches)								
2 WAY DRILLINGS 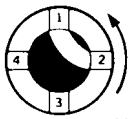 HANDLE TURN 90°	CPVC2T007	⅛	2	2	7/16	3	¾	1	¼–20TH'D	1⅜	¾ O.D. x ⅛
	CPVC2T010	¼	2	2	7/16	3	¾	1	¼–20TH'D	1⅜	¾ O.D. x ⅛
	CPVC2T012	⅜	2½	2⅞	9/16	3½	¾	1½	¼–20TH'D	2	1 O.D. x ¼
	CPVC2T015	½	2½	2⅞	9/16	3½	¾	1½	¼–20TH'D	2	1 O.D. x ¼
3 WAY DRILLINGS 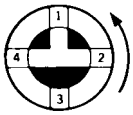 HANDLE TURN 90°	CPVC3T007	⅛	2	2	7/16	3	¾	1	¼–20TH'D	1⅜	¾ O.D. x ⅛
	CPVC3T010	¼	2	2	7/16	3	¾	1	¼–20TH'D	1⅜	¾ O.D. x ⅛
	CPVC3T012	⅜	2½	2⅞	9/16	3½	¾	1½	¼–20TH'D	2	1 O.D. x ¼
	CPVC3T015	½	2½	2⅞	9/16	3½	¾	1½	¼–20TH'D	2	1 O.D. x ¼
4 WAY DRILLINGS 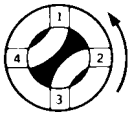 HANDLE TURN 90°	CPVC4T007	⅛	2	2	7/16	3	¾	1	¼–20TH'D	1⅜	¾ O.D. x ⅛
	CPVC4T010	¼	2	2	7/16	3	¾	1	¼–20TH'D	1⅜	¾ O.D. x ⅛
	CPVC4T012	⅜	2½	2⅞	9/16	3½	¾	1½	¼–20TH'D	2	1 O.D. x ¼
	CPVC4T015	½	2½	2⅞	9/16	3½	¾	1½	¼–20TH'D	2	1 O.D. x ¼
5 WAY DRILLINGS 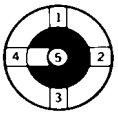 HANDLE TURN 360°	CPVC5T007	⅛	2	2½	7/16	3	¾	1	¼–20TH'D	1⅜	¾ O.D. x ⅛
	CPVC5T010	¼	2	2½	7/16	3	¾	1	¼–20TH'D	1⅜	¾ O.D. x ⅛
	CPVC5T012	⅜	2½	3¾	9/16	3½	¾	1½	¼–20TH'D	2	1 O.D. x ¼
	CPVC5T015	½	2½	3¾	9/16	3½	¾	1½	¼–20TH'D	2	1 O.D. x ¼

Series CPVC2T, CPVC3T, CPVC4T, CPVC5T — PVC body, precision tapered Teflon® rotor, Viton® O-ring seal.
Series CCVPC2T, CCVPC3T, CCVPC4T, CCVPC5T — CVPC body, precision tapered Teflon® rotor, Viton® O-ring seal.
Series CPP2T, CPP3T, CPP4T, CPP5T — Polypro body, precision tapered Teflon® rotor, Viton® O-ring seal.
Series CPVDF2T, CPVDF3T, CPVDF4T, CPVDF5T — PVDF body, precision tapered Teflon® rotor, Viton® O-ring seal.
Series CTEF2, CTEF3, CTEF4, CTEF5 — Teflon® body, precision tapered Teflon® rotor, Viton® O-ring seal.
NOTE: 2-Way valves are normally furnished ELL-drilled; optional straight-through or slotted porting available at no extra charge when requested. Valves having 90° rotation are equipped with mechanical stops. Extra charge for special porting.

Selector Valves for Eliminating Dead Volume

For applications requiring no dead volume anywhere within the valve, which is commonly the case in instrument sampling, Conant provides two specially designed models of selector valves in sizes ⅛", ¼", ⅜" and ½" and stack valves in sizes ⅛" and ¼".

One model has welded-in tube stubs, which protrude from the body of the valve, so that compression fittings may be connected easily to the stubs. The other model has tube fittings welded into the body of the valve to simplify connecting metal or plastic tubing.

Both models eliminate the dead volume space between the valve rotor and the fitting.

Tube Stubs Model

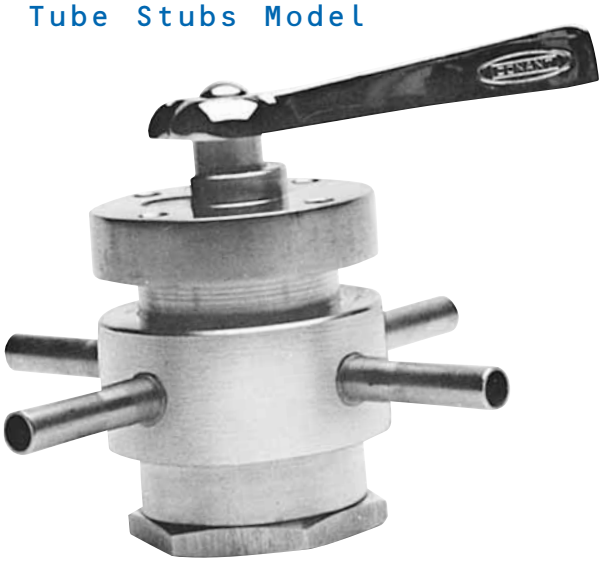

Tube Fittings Model

CALL CONANT FOR YOUR CUSTOM APPLICATION NEEDS

Hastelloy® Selector Valves for Corrosive Service

All Conant selector valves in 1/16", 1/8", 1/4", 3/8", and 1/2" NPTF sizes and stack valves in 1/8" and 1/4" sizes can be fabricated in either Hastelloy® C-276 or Hastelloy® B-2.

Hastelloy® C-276 resists a broad range of corrosive chemicals. It is particularly well-suited for handling strong oxidizers, such as ferric and cupric chlorides, hot contaminated mineral acids, formic and acetic acids, acetic anhydride, sea water and brine solutions. Hastelloy® C-276 is one of the few materials that can withstand the corrosive effects of wet chlorine gas, sodium hypochlorite, and chlorine dioxide solutions.

Hastelloy® B-2 is recommended for applications involving all concentrations of hydrochloric acid at temperatures through their boiling points. This alloy also resists a variety of other corrosive chemicals, like hydrogen chloride gas and sulfuric, acetic, and phosphoric acids.

Extended Shaft Options

Selector Valves for Sour Environments

Conant has developed a line of valves for control panel and instrument sampling applications which are certified to meet the standards put forth by the National Association of Corrosion Engineers (NACE) for equipment used in sour environments. The NACE Standard, MR-01-75 (Revised), covers metallic material requirements for resistance to "sulfide stress cracking for petroleum production, drilling, gathering and flowline equipment, and field processing facilities to be used in H2S bearing hydrocarbon service." The bodies and rotors of all these special selector valves, stack valves, and control vent valves are constructed of metals which resist sulfide stress cracking. Rotor sleeves on all valves are made of self-lubricating Teflon®.

Conant valves for use in sour environments are permanently marked to indicate their compliance with the NACE Standard.

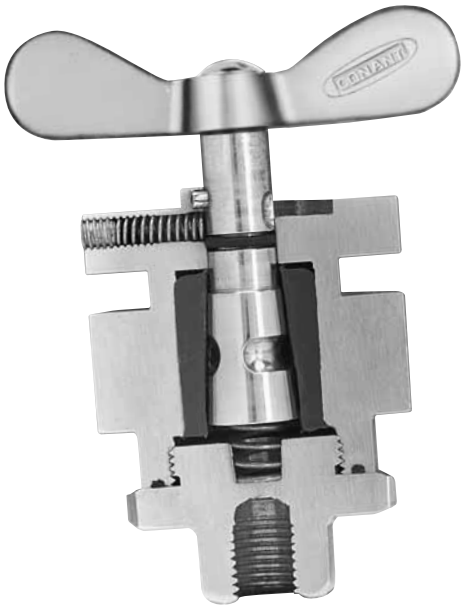

Custom Port Configurations